Easy bath

Baths

Surfex®

Beyond 511

Stonex®

Ariane 515
Ona (N) 516
Raina 518
Maui Square 522
Maui Round 522

Acrylics

Virginia 525
BeCool 525
Vythos 527
Easy 528
Panels 530
Waitara 532
Nolah 533
Tazia 534

Cast Iron

Caremern 537
Newcast 537
Haiti 538
Malibu 538
Continental 539
Banaseo 539

Steel

Princess-N 543
Contesa 543
Contesa Bañaseo 544
Panels 544
Bath wastes 545

Hydromassage systems

Functions 547
Control Panels 548
Jets types 548

x2 Two-person bath

2,4 mm Steel thickness

(N) Novelty

Surfex®

Baths

Thermal insulation

Low-conductivity material that provides outstanding insulation, resulting in greater energy efficiency.

Sophisticated finish

Soft, pleasant and matt touch, a result of its composition based on minerals and resins.

Sustainable

Composition based on organic and 100% recyclable materials.

Repairable

Solid material that can be easily repaired and recover its original look.

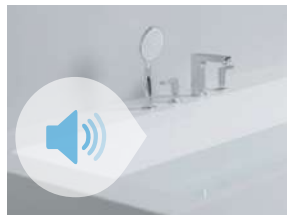

Sound insulation

High absorption capacity of sound waves that softens the impact of water, resulting in more silent baths.

Baths / Surfex®

Beyond*

SURFEX®

x2

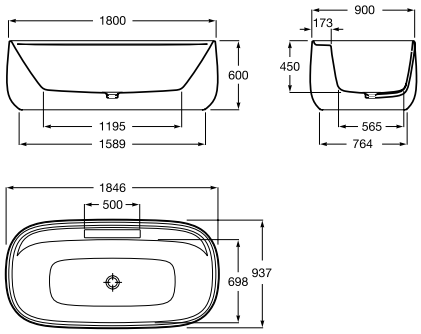

1800 x 900
Surfex® oval bath. Includes click-clack waste and siphon with cover Surfex®

		Capacity	White
Ref. A248452000	Without taphole	290 L	
Ref. A248453000	With taphole	290 L	

Beyond*

White and Onyx
0X

SURFEX®

x2

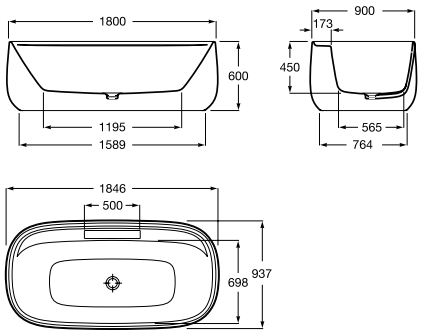

1800 x 900
Surfex® oval bath. Includes click-clack waste and siphon with cover Surfex®

		Capacity	Colour
Ref. A248452..0	Without taphole	290 L	
Ref. A248453..0	With taphole	290 L	

White and Pearl
0P

White and Beige
0B

White and Coffee
0C

White and Black
0K
N

Dimensions
in mm.

*Product on request

Replace (..) in the product reference with the
code of the chosen finish.

Baths / Surfex®

Beyond*

SURFEX®

x2

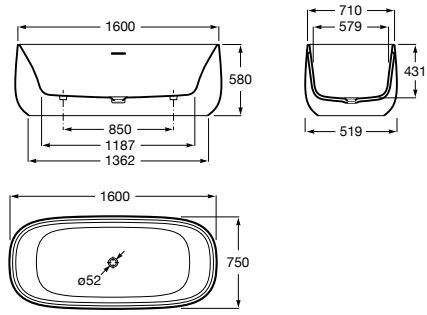

1600 x 750
Oval free-standing SURFEX® bath. Includes click-clack waste and siphon.

		Capacity	White
Ref. A248465000		217 L	

Beyond*

White and Pearl
0P

SURFEX®

x2

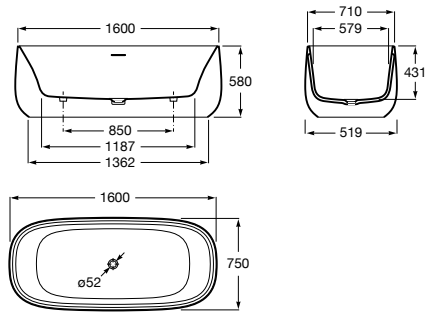

1600 x 750
Oval free-standing SURFEX® bath. Includes click-clack waste and siphon.

		Capacity	Colour
Ref. A248465..0		217 L	

White and Onyx
0X

White and Beige
0B

White and Coffee
0C

N

White and Black
0K

Dimensions
in mm.

*Product on request

Replace (..) in the product reference with the
code of the chosen finish.

Beyond bath

Stonex®

Baths

Easy cleaning
Easy-to-maintain textured surface that can be easily cleaned with just a wet cloth.

Repairable
Highly malleable sanitary gel coat layer that can be easily repaired.

Antislip
Textured surface that ensures the highest levels of anti-slip performance, while offering a very natural sensation, pleasant to the touch.

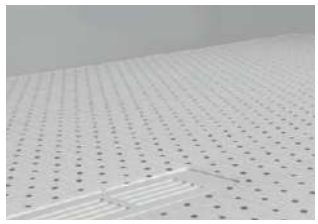

Resistant
Outer gel coat layer that ensures great resistance to wear and tear, discoloration, chemical agents and UV light.

Baths / Stonex®

Ariane* (N)

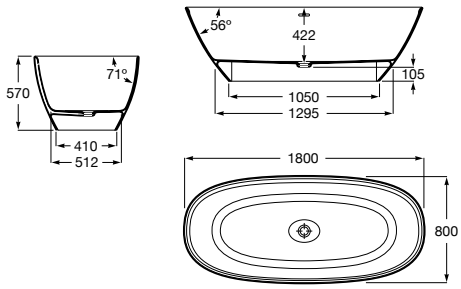

STONEX®

1800 x 800
Stonex® bath. Inlcudes waste drain (ø 52 mm) and integrated overflow

	Massage	Capacity	White	Colour
Ref. A248669..0	Without massage	284 L		

White 00 | White and Beige 0B | White and Coffee 0C

White and Pearl 0P | White and Onyx 0X | White and Black 0K

Option: Click-Clack waste in colour (N)
Ref. A24L5810.. * 0R CN RG NB

Ariane* (N)

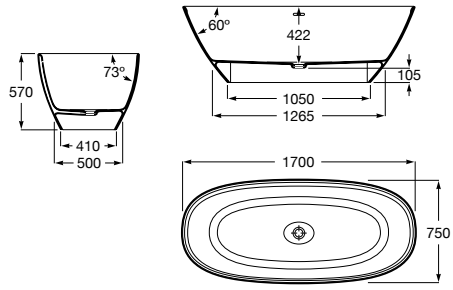

STONEX®

1700 x 750
Stonex® bath. Inlcudes waste drain (ø 52 mm) and integrated overflow

	Massage	Capacity	White	Colour
Ref. A248670..0	Without massage	260 L		

White 00 | White and Beige 0B | White and Coffee 0C

White and Pearl 0P | White and Onyx 0X | White and Black 0K

Option: Click-Clack waste in colour (N)
Ref. A24L5810.. * 0R CN RG NB

Dimensions in mm.

*Product on request

Replace (..) in the product reference with the code of the chosen finish.

Ariane

STONEX®

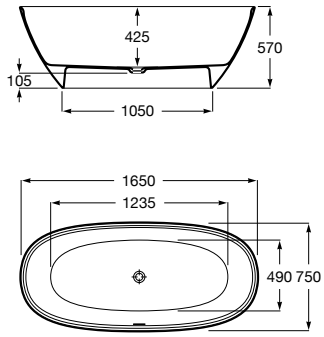

1650 x 750
Stonex® bath. Inlcudes waste drain (ø 52 mm) and integrated overflow

	Massage	Capacity	White	Colour*
Ref. A248470..0	Without massage	240 L		

White 00
White and Onyx 0X
White and Beige 0B
White and Pearl 0P
White and Coffee 0C
White and Black 0K

Option: Click-Clack waste in colour (N)
Ref. A24L5810.. *
0R CN RG NB

Ona* (N)

x2

STONEX®

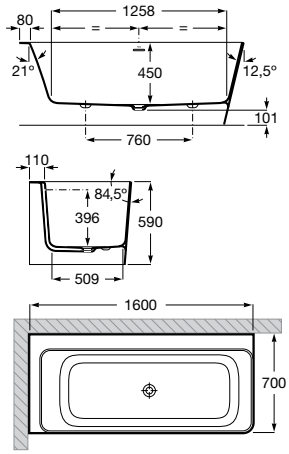

1600 x 700
Left corner Stonex® bath with panels. Includes click-clack drain, trap and integrated overflow.

	Massage	Capacity	White	Colour
Ref. A248629..0	Without massage	260 L		

White 00
White and Black 0K

Option: Click-Clack waste in colour (N)
Ref. A24L5810.. *
0R CN RG NB

Dimensions in mm.

*Product on request

Replace (..) in the product reference with the code of the chosen finish.

Ona* (N)

x2

STONEX®

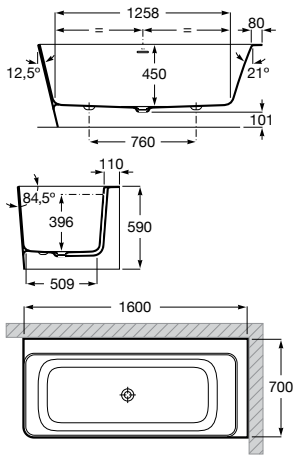

1600 x 700
Right corner Stonex® bath with panels. Includes click-clack drain, trap and integrated overflow.

	Massage	Capacity	White	Colour
Ref. A248629..0	Without massage	260 L		

White 00

White and Black 0K

Option: Click-Clack waste in colour (N)

Ref. A24L5810.. *

0R CN RG NB

Ona* (N)

x2

STONEX®

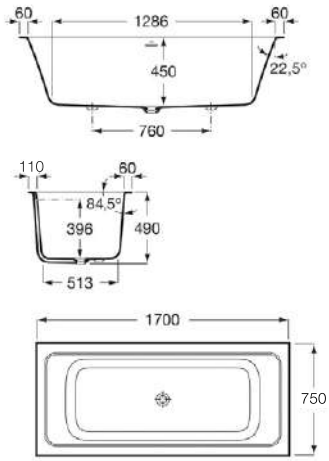

1700 x 750
Rectangular Stonex® drop in bath. Includes click-clack drain, trap and integrated overflow.

	Massage	Capacity	White
Ref. A248630000	Without massage	277 L	

White 00

Option: Click-Clack waste in colour (N)

Ref. A24L5810.. *

0R CN RG NB

Dimensions in mm.

*Product on request

Replace (..) in the product reference with the code of the chosen finish.

Ona* (N)

x2

STONEX®

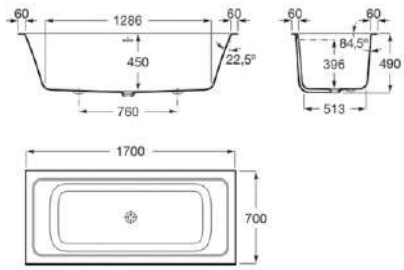

1700 x 700
Rectangular Stonex® drop in bath. Includes click-clack drain, trap and integrated overflow.

	Massage	Capacity	White
Ref. A248631000	Without massage	277 L	

White
00

Option: Click-Clack waste in colour (N)
Ref. A24L5810.. *

0R CN RG NB

Raina* (N)

STONEX®

x2

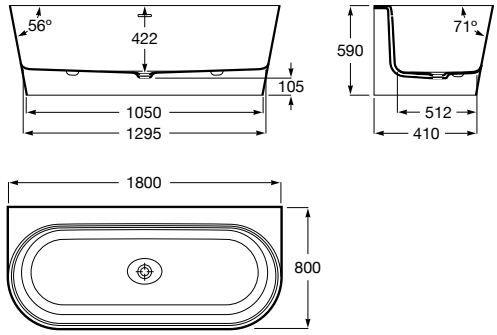

1800 x 800
Stonex® back to wall bath. Inlcudes waste drain (ø 52 mm) and integrated overflow

	Massage	Capacity	White	Colour
Ref. A248665..0	Without massage	338 L		

White
00

White and Onyx
0X

White and Beige
0B

White and Pearl
0P

White and Coffee
0C

White and Black
0K

Option: Click-Clack waste in colour (N)
Ref. A24L5810.. *

0R CN RG NB

Dimensions
in mm.

*Product on request

Replace (..) in the product reference with the
code of the chosen finish.

Raina* (N)

STONEX®

x2

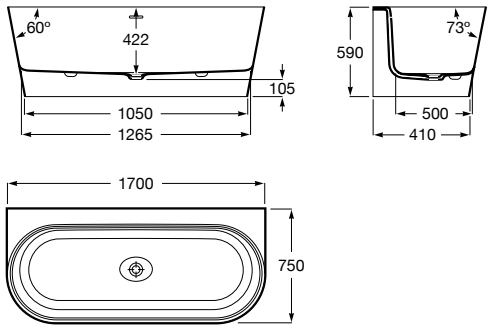

1700 x 750
Stonex® back to wall bath. Inlcudes waste drain (ø 52 mm) and integrated overflow

	Massage	Capacity	White	Colour
Ref. A248668..0	Without massage	305 L		

White 00
White and Onyx 0X
White and Beige 0B
White and Pearl 0P
White and Coffee 0C
White and Black 0K

Option: Click-Clack waste in colour (N)
Ref. A24L5810.. *
0R CN RG NB

Raina

STONEX®

x2

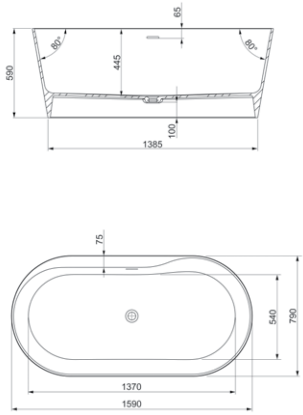

1590 x 790
Stonex® bath. Inlcudes waste drain (ø 52 mm) and integrated overflow

	Massage	Capacity	White	Colour*
Ref. A248466..0	Without massage	318 L		

(N)

White 00
White and Onyx 0X
White and Beige 0B
White and Pearl 0P
White and Coffee 0C
White and Black 0K

Option: Click-Clack waste in colour (N)
Ref. A24L5810.. *
0R CN RG NB

Dimensions in mm.

*Product on request

Replace (..) in the product reference with the code of the chosen finish.

Raina* (N)

STONEX®

x2

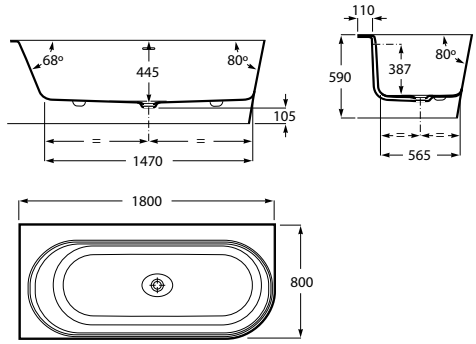

1800 x 800
Stonex® corner bath, left. Inlcudes waste drain (ø 52 mm) and integrated overflow

	Massage	Capacity	White	Colour
Ref. A248663..0	Without massage	320 L		

White 00 | White and Onyx 0X | White and Beige 0B

White and Pearl 0P | White and Coffee 0C | White and Black 0K

Option: Click-Clack waste in colour (N)

Ref. A24L5810.. *

0R CN RG NB

Raina* (N)

STONEX®

x2

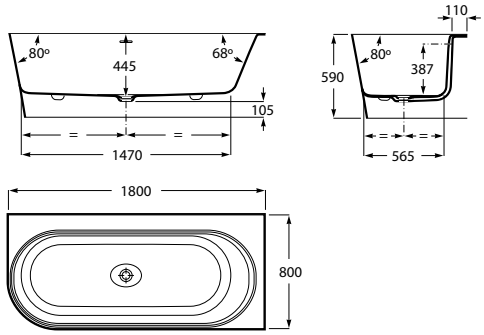

1800 x 800
Stonex® corner bath, right. Inlcudes waste drain (ø 52 mm) and integrated overflow

	Massage	Capacity	White	Colour
Ref. A248664..0	Without massage	320 L		

White 00 | White and Onyx 0X | White and Beige 0B

White and Pearl 0P | White and Coffee 0C | White and Black 0K

Option: Click-Clack waste in colour (N)

Ref. A24L5810.. *

0R CN RG NB

Dimensions in mm.

*Product on request

Replace (..) in the product reference with the code of the chosen finish.

Raina* (N)

STONEX®

x2

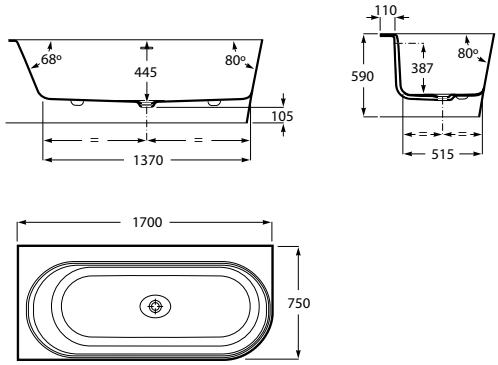

1700 x 750
Stonex® corner bath, left. Inlcudes waste drain (ø 52 mm) and integrated overflow

	Massage	Capacity	White	Colour
Ref. A248666..0	Without massage	274 L		

White 00
White and Onyx 0X
White and Beige 0B
White and Pearl 0P
White and Coffee 0C
White and Black 0K

Option: Click-Clack waste in colour (N)
Ref. A24L5810.. *

0R CN RG NB

Raina* (N)

STONEX®

x2

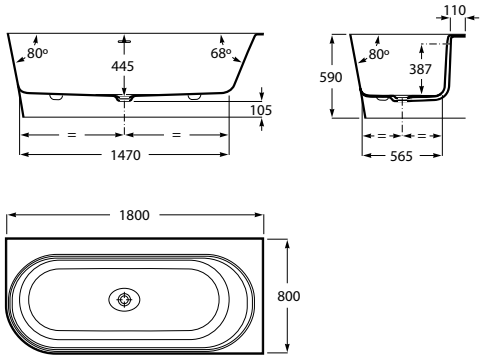

1700 x 750
Stonex® corner bath, right. Inlcudes waste drain (ø 52 mm) and integrated overflow

	Massage	Capacity	White	Colour
Ref. A248667..0	Without massage	274 L		

White 00
White and Onyx 0X
White and Beige 0B
White and Pearl 0P
White and Coffee 0C
White and Black 0K

Option: Click-Clack waste in colour (N)
Ref. A24L5810.. *

0R CN RG NB

Dimensions in mm.

*Product on request

Replace (..) in the product reference with the code of the chosen finish.

Baths / Stonex®

Maui Square*

STONEX®

x2

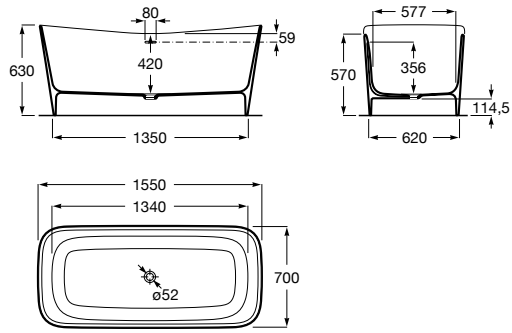

1550 x 700
Rectangular free-standing Stonex® bath. Includes click-clack waste and siphon.

		Capacity	White	Colour
Ref. A248502..0		282 L		

White 00 | White and Onyx 0X | White and Beige 0B

White and Pearl 0P | White and Coffee 0C | White and Black 0K (N)

Option: Click-Clack waste in colour (N)
Ref. A24L5810.. *

0R CN RG NB

Maui Round

STONEX®

x2

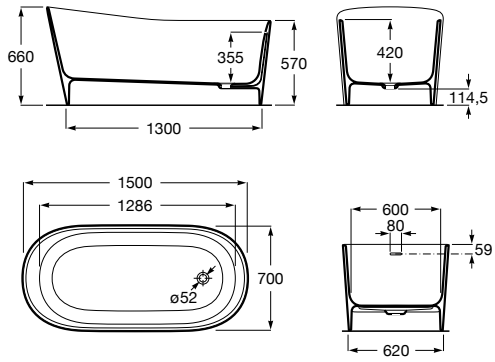

1500 x 700
Oval free-standing Stonex® bath. Includes click-clack waste and siphon.

		Capacity	White	Colour*
Ref. A248499..0		248 L		

White 00 | White and Onyx 0X | White and Beige 0B

White and Pearl 0P | White and Coffee 0C | White and Black 0K (N)

Option: Click-Clack waste in colour (N)
Ref. A24L5810.. *

0R CN RG NB

Dimensions
in mm.

*Product on request

Click-Clack waste (N)

Click-clack waste with siphon for Stonex bathtubs Ariane, Raina, Ona, Maui
Ref. A24L5810..

Finishes:

0R CN RG NB

Maui Round bath

Acrylic

Baths

Easy cleaning

Easy-to-maintain smooth surface that can be easily cleaned with conventional cleaning products.

Resistance

High resistance to wear and tear, discoloration, chemical agents and UV light.

Warmth

Warm and soft surface, pleasant to the touch.

Baths / Acrylic

Virginia One-Piece*

ACRYLIC

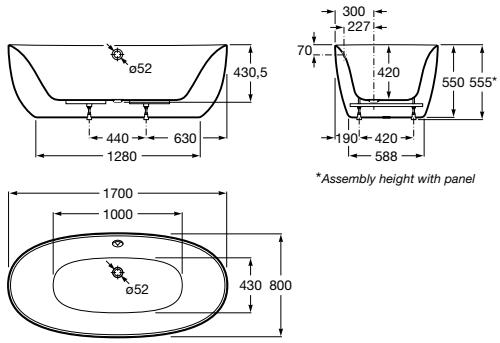

1700 x 800
Oval acrylic bath with pop-up waste and siphon

	Massage	Capacity	White
Ref. A248313000	Without massage	175 L	

BeCool biplaza*

ACRYLIC

x2

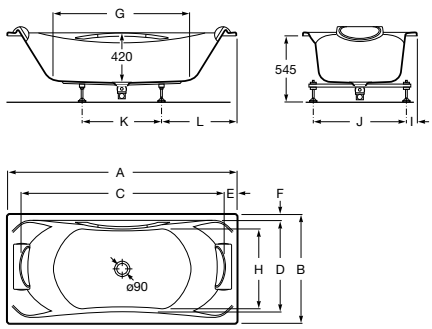

A	B	C	D	E	F	G	H	I	J	K	L	Litr.[1]
1900	1100	1685	980	107,5	60	1230	830	85	930	700	600	285
1800	900	1585	800	107,5	50	1130	650	85	730	620	590	220

[1] Liters to the overflow *Mounting height with panel

Acrylic bath

Dimensions		Massage	Finishes	Capacity		White
1900 x 1100	**Ref. A248052001**	Total	Chrome	285 L	PD	
	Ref. A247989001	Without massage	Chrome	285 L		
1800 x 900	**Ref. A248054001**	Total	Chrome	220 L	PD	
	Ref. A248013001	Without massage	Chrome	220 L		
		Feet, headrest, handle and drain with hidden overflow as standard				

Compatible panels on page 530

Baths / Acrylic

BeCool*

ACRYLIC

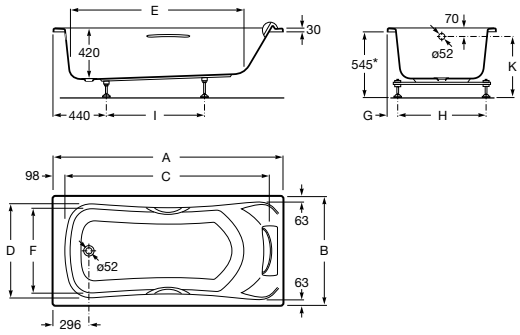

A	B	C	D	E	F	G	H	I	Litr.[1]
1900	900	1695	774	1435	695	85	730	810	300
1800	800	1595	674	1335	590	80	640	810	240
1700	800	1495	674	1235	590	80	640	700	225

[1] Liters to the overflow *Mounting height with panel

Acrylic bath

Dimensions		Massage	Finishes	Capacity		White
1900 x 900	**Ref. A248046001**	Total	Chrome	300 L	PD	
	Ref. A248014001	Without massage	Chrome	300 L		
1800 x 800	**Ref. A248048001**	Total	Chrome	240 L	PD	
	Ref. A248015001	Without massage	Chrome	240 L		
1700 x 800	**Ref. A248050001**	Total	Chrome	225 L	PD	
	Ref. A248016001	Without massage	Chrome	225 L		
		Feet, headrest and handles as standard				

For version without massage optional siphon ø52:

Chrome fninsh	**Ref. A506404600**	00
Rest of finishes	**Ref. A5064046..*** (N)	0A CN RG NB

Compatible panels on page 530

Dimensions in mm.

*Product on request

PD Digital panel

Replace (..) in the product reference with the code of the chosen finish.

Baths / Acrylic

Vythos*

ACRYLIC

x2

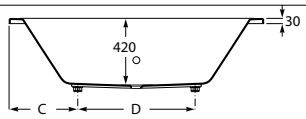

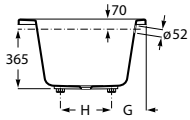

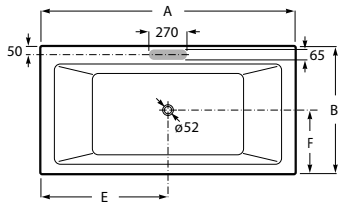

A	B	C	D	E	F	G	H
1800	900	470	860	900	425	255	340
1700	800	460	780	850	375	240	270

Acrylic bath

Dimensions		Massage	Capacity		White
1800 x 900	**Ref. A248607001**	Total	290 L	PD	
	Ref. A248584001	Tonic	290 L	PL	
	Ref. A248556000	Without massage	290 L		
	Ref. A259114000	Front panel			
	Ref. A259118000	Side panel			
1700 x 800	**Ref. A248606001**	Total	210 L	PD	
	Ref. A248583001	Tonic	210 L	PL	
	Ref. A248555000	Without massage	210 L		
	Ref. A259113000	Front panel			
	Ref. A259117000	Side panel			
	Ref. A248594000	Headrest optional			
	Ref. A248595000	Handle optional (1 piece)			
		Feet included			

For version without massage optional siphon ø52:

Chrome fninsh	**Ref. A248213001***	00
Rest of finishes	**Ref. A2482130..*** (N)	0A CN RG NB

Dimensions in mm.

*Product on request

Replace (..) in the product reference with the code of the chosen finish.

PD Digital panel
PL Button

Baths / Acrylic

Easy angular*

ACRYLIC

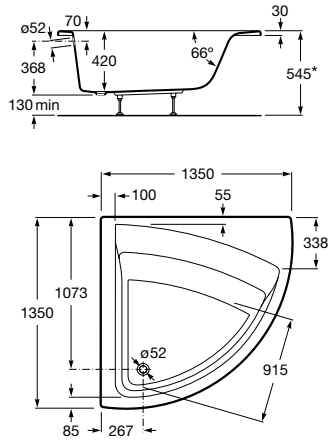

1350 x 1350
Acrylic bath

	Massage	Capacity		White
Ref. A248188001	Tonic	247 L	PL	
Ref. A248189000	Without massage	247 L		
Ref. A259861000	Optional panel			
	Feet included			

Optional siphon ø52:

Chrome fninsh	**Ref. A506404600**	00
Rest of finishes	**Ref. A5064046..*** (N)	0A CN RG NB

Compatible panels on page

Dimensions in mm.

*Product on request

PL Button

Replace (..) in the product reference with the code of the chosen finish.

Baths / Acrylic

Easy Square

ACRYLIC

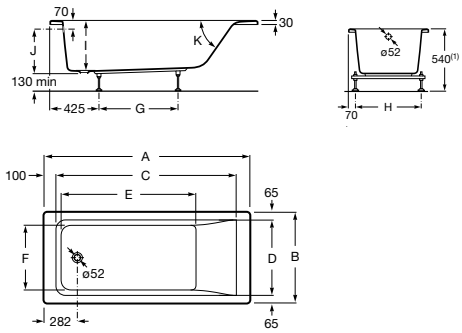

A	B	C	D	E	F	G	H	I	J	K	Litr.[1]
1700	750	1418	620	1110	540	675	610	420	368	55°	215
1600	750	1318	620	1010	540	575	610	420	368	55°	197
1700	700	1418	570	1110	490	675	560	420	368	55°	196
1600	700	1318	570	1010	490	575	560	420	368	55°	181
1500	700	1218	570	910	490	525	560	400	348	62°	161
1400	700	1118	570	910	490	425	560	400	348	62°	147

[1] Liters to the overflow *Mounting height with panel

Acrylic bath

Dimensions		Massage	Capacity		White
1700 x 750	**Ref. A248155001**	Tonic	215 L	PL	
	Ref. A248149000	Without massage	215 L		
1700 x 700	**Ref. A248156001**	Tonic	196 L	PL	
	Ref. A248150000	Without massage	196 L		
1600 x 750	**Ref. A248171001***	Tonic	197 L	PL	
	Ref. A248178000*	Without massage	197 L		
1600 x 700	**Ref. A248157001***	Tonic	181L	PL	
	Ref. A248151000*	Without massage	181 L		
1500 x 700	**Ref. A248172001***	Tonic	161 L	PL	
	Ref. A248179000*	Without massage	161 L		
1400 x 700	**Ref. A248173001***	Tonic	147 L	PL	
	Ref. A248180000*	Without massage	147 L		
		Feet included			

Optional siphon ø52:

Chrome fninsh	**Ref. A506404600**	00
Rest of finishes	**Ref. A5064046..*** (N)	0A CN RG NB

Compatible panels on page 530

Dimensions in mm.

*Product on request

PL Button

Replace (..) in the product reference with the code of the chosen finish.

Baths / Acrylic

Acrylic panels

Dimensions		Massage	White
1900*	**Ref. A259929..0**	Front panel	
1800*	**Ref. A259930..0**	Front panel	
1700*	**Ref. A259931..0**	Front panel	
1600*	**Ref. A259932..0**	Front panel	
1500*	**Ref. A259933..0**	Front panel	
1400*	**Ref. A259934..0**	Front panel	

Dimensions		Massage	White
1900 x 900*	**Ref. A259827..0**	Reversible panel in L	
1800 x 900*	**Ref. A259828..0**	Reversible panel in L	
1800 x 800*	**Ref. A259829..0**	Reversible panel in L	
1700 x 800*	**Ref. A259830..0**	Reversible panel in L	
1700 x 750*	**Ref. A259831..0**	Reversible panel in L	

For the correct installation of panels it is essential to regulate the bathtub, through its legs, at the height specified in the product manual.

L-panel is not possible to be installed with bathtub Easy with hydromassage.

Dimensions
in mm.

*Product on request

Baths / Acrylic

Element for installation of L panel in acrylic bathtub without hydromassage

Ref. A259851000

Compatibility with panels

	Dimensions	With massage		Without massage	
		Front panel	L-panel	Front panel	L-panel
BECOOL	1900 x 1000	•	-	•	-
	1800 x 900 1900 x 900 1800 x 800 1700 x 800 1700 x 700		•		•
EASY	1700 x 750 1700 x 700 1600 x 750 1600 x 700	•	-	•	•
	1500 x 700 1400 x 700				-

Dimensions
in mm.

Baths / Acrylic

Waitara asymmetrical acrylic bath (Left)

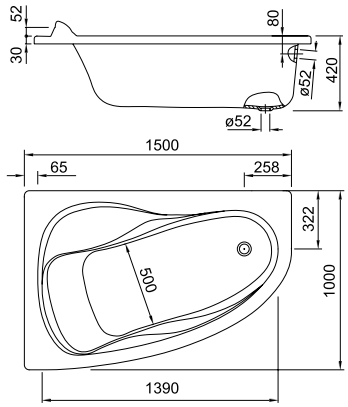

ACRYLIC

1500 x 1000
Acrylic bath

	Massage	Capacity	White
Ref. A248398000	Without massage	210 L	
Ref. A248401000	Panel optional		
Ref. A24F113000	Legs for bath		
Ref. A24L542000	Siphon ø 52		

Waitara asymmetrical acrylic bath (Right)

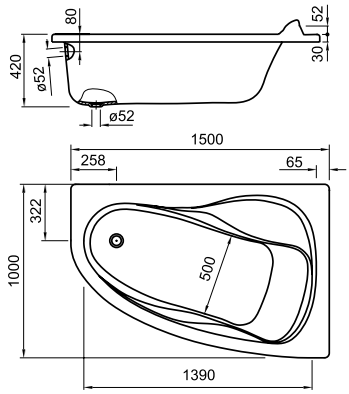

ACRYLIC

1500 x 1000
Acrylic bath

	Massage	Capacity	White
Ref. A248399000	Without massage	210 L	
Ref. A248402000	Panel optional		
Ref. A24F113000	Legs for bath		
Ref. A24L542000	Siphon ø 52		

Dimensions
in mm.

*Product on request

Baths / Acrylic

Nolah

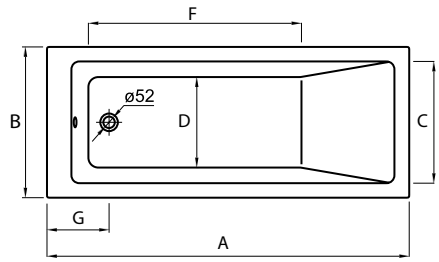

ACRYLIC

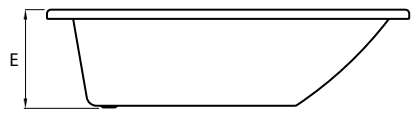

A	B	C	D	E	F	G
1800	800	670	490	450	1200	245
1700	750	610	440	450	1035	290
1700	700	560	390	460	1035	290

Acrylic bath

Dimensions		Massage	Capacity	White
1800 x 800	**Ref. A248636000**	Without massage	258 L	
	Ref. A259131000	Front panel		
	Ref. A259130000	Side panel		
	Ref. A25P036000	Structure for bath		
1700 x 750	**Ref. A248400000**	Without massage	206 L	
	Ref. A259923000	Front panel		
	Ref. A259927000	Side panel		
1700 x 700	**Ref. A248395000**	Without massage	186 L	
	Ref. A259923000	Front panel		
	Ref. A259926000	Side panel		
	Ref. A25F032000	Structure for bath		
	Ref. A24F112000	Legs for bath		
	Ref. A24L542000	Siphon		

Mounting with legs is recommended for built-in installation. To install the bath with panels it is recommended to use structure for better stability of the bath.

Dimensions
in mm.

Baths / Acrylic

Tazia

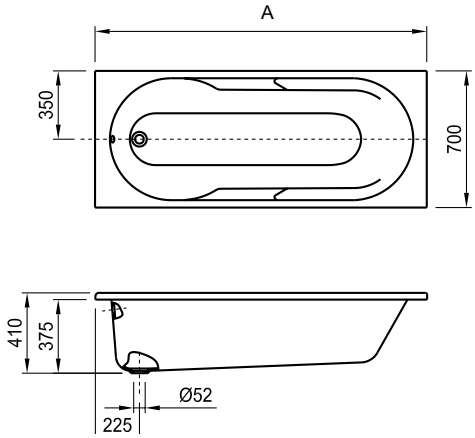

ACRYLIC

A
1700
1600
1500

Acrylic bath

Dimensions		Massage	Capacity	White
1700 x 700	**Ref. A248405000**	Without massage	178 L	
	Ref. A259923000	Front panel		
	Ref. A259926000	Side panel		
	Ref. A25F032000	Structure for bath		
1600 x 700	**Ref. A248396000**	Without massage	159 L	
	Ref. A259924000	Front panel		
	Ref. A259926000	Side panel		
	Ref. A25F033000	Structure for bath		
1500 x 700	**Ref. A248397000**	Without massage	124 L	
	Ref. A24F112000	Legs for bath		
	Ref. A24L542000	Siphon		

Mounting with legs is recommended for built-in installation. To install the bath with panels it is recommended to use structure for better stability of the bath.

Dimensions
in mm.

Pop-up waste (N)

Pop-up waste with siphon ø 52 mm:

Chrome fninsh	**Ref. A506404600**
Rest of finishes	**Ref. A5064046..**

Finishes:

00 0A CN RG NB

Special waste (N)

Special waste with siphon for bathtubs Vythos biplaza

Chrome fninsh	**Ref. A248213001**
Rest of finishes	**Ref. A2482130..**

Finishes:

01 0A CN RG NB

Tazia bath

Cast iron

Baths

Firmness

High mechanical resistance to shocks that prevents the surface from being damaged or deformed by impacts.

Durability

Material of an outstanding elegance and resistance that ensures a long life cycle.

Thermal insulation

Low-conductivity material that provides outstanding insulation, resulting in greater energy efficiency.

Easy to clean

Smooth surface, easy to maintain, which can be disinfected with conventional cleaning products.

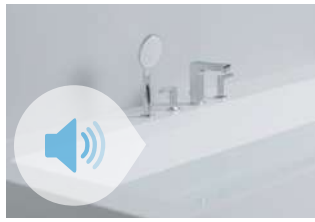

Sound insulation

High absorption capacity of sound waves that softens the impact of water, resulting in more silent baths.

Baths / Cast Iron

Carmen*

CAST IRON

ANTI-SLIP

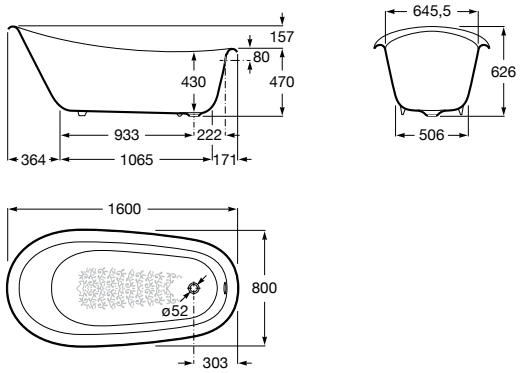

Cast Iron bath

Dimensions			White
1600 x 800	**Ref. A234250007**	Bath[1] with white exterior	

[1] Support options not included

Newcast*

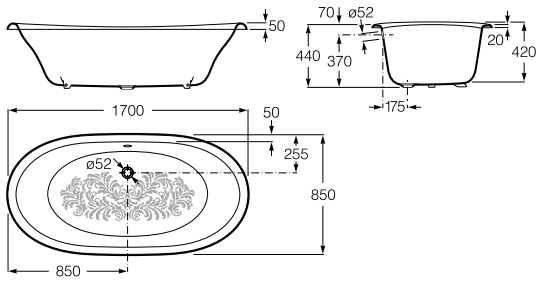

CAST IRON

ANTI-SLIP

Cast Iron bath

Dimensions			White
1700 x 850	**Ref. A233650000**	Bath[1] with grey exterior	
	Ref. A233650007	Bath[1] with white exterior	

[1] Support options not included

Support options for Carmen and Newcast baths		
Ref. A291041001	Set of 4 feet CLASSIC cast-iron/beech, chromed	
Ref. A291069001	Set 4 legs SAVANHA (lion paw type), chromed	
Ref. A291094000	Set of 4 feet EAGLE (eagle-claw type), chromed	
Ref. A506403400	Waste for bath Newcast, Carmen with overflow and chromed trap	

Classic

Savanha

Eagle

Dimensions in mm.

*Product on request

Baths / Cast Iron

Haiti

A	B	C	D	Litr.[1]
1700	800	1490	680	190
1600	800	1390	680	177

[1] Liters to the overflow

CAST IRON

ANTI-SLIP

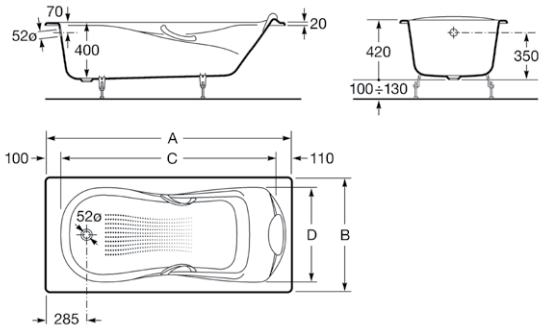

Cast Iron bath

Dimensions		Massage	**Finishes**	Capacity	White
1700 x 800	**Ref. A23277000R**	Without massage	Chrome handles	190 L	
1600 x 800	**Ref. A23307000R**	Without massage	Chrome handles	177 L	
	Ref. A291051100	Optional headrest			
	Ref. A150412330	Set of feet			

For version without massage optional siphon ø52:

Chrome fninsh	**Ref. A506404600**	00
Rest of finishes	**Ref. A5064046..***	0B CN RG NB

Malibu

A	B	C	D	Litr.[1]
1700	750	1513	630	185
1600	750	1413	630	171
1500	750	1313	630	165
1700	700	1513	580	178
1600	700	1413	580	162

[1] Liters to the overflow

CAST IRON

ANTI-SLIP

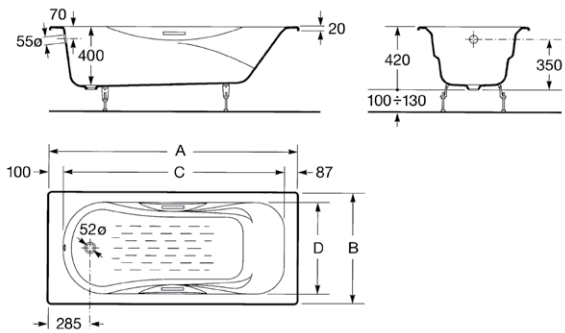

Cast Iron bath

Dimensions		Massage	**Finishes**	Capacity	White
1700 x 750	**Ref. A23097000R**	Without Massage	Chrome handles	185 L	
1600 x 750	**Ref. A23107000R***	Without Massage	Chrome handles	171 L	
1500 x 750	**Ref. A23157000R***	Without Massage	Chrome handles	165 L	
1700 x 700	**Ref. A233350001**	Without Massage	Chrome handles	178 L	
1600 x 700	**Ref. A233450001**	Without Massage	Chrome handles	162 L	
1700 x 750	**Ref. A230960000***	Without handles		185 L	
1700 x 700	**Ref. A233360000***	Without handles		178 L	
1600 x 700	**Ref. A233460000***	Without handles		162 L	
1600 x 750	**Ref. A231060000***	Without handles		171 L	
1500 x 750	**Ref. A231560000***	Without handles		165 L	
	Ref. A291053100*	Headrest optional			
	Ref. A150412330	Set of feet			

For version without massage optional siphon ø52:

Chrome fninsh	**Ref. A506404600**	00
Rest of finishes	**Ref. A5064046..***	0B CN RG NB

Dimensions in mm.

*Product on request

Replace (..) in the product reference with the code of the chosen finish.

Baths / Cast Iron

Continental

CAST IRON

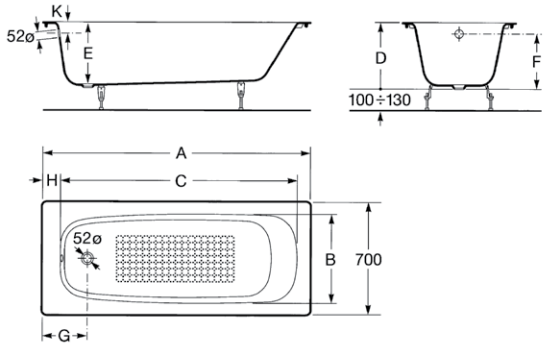

A	B	C	D	E	F	G	H	K	Litr.[1]
1700	570	1530	420	400	350	285	100	70	182
1600	570	1430	420	400	350	285	100	70	170
1500	570	1330	420	400	350	285	100	70	161
1400	560	1230	420	400	350	285	100	70	144
1200	550	1050	390	370	330	260	75	60	117

[1] Litres to the overflow

Cast Iron bath

Dimensions			Capacity	White
1700 x 700	**Ref. A21291100R**	With anti-slip bottom	182 L	
1600 x 700	**Ref. A21291200R**	With anti-slip bottom	170 L	
1500 x 700	**Ref. A21291300R**	With anti-slip bottom	161 L	
1400 x 700	**Ref. A212914001**	With anti-slip bottom	144 L	
1200 x 700	**Ref. A211506001**	Without anti-slip bottom	117 L	
	Ref. A150412330	Set of feet		

For version without massage optional siphon ø52:

Chrome fninsh	**Ref. A506404600**	00
Rest of finishes	**Ref. A5064046..***	0B CN RG NB

Bañaseo

CAST IRON

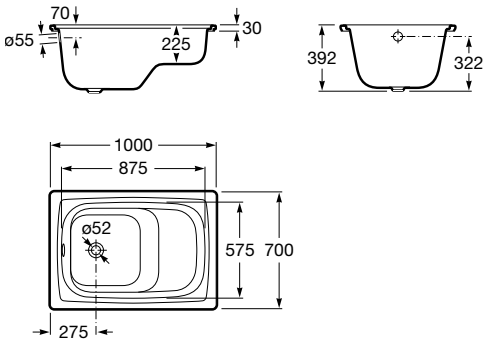

1000 x 700
Cast Iron bath

		Capacity	White
Ref. A213000001	Without massage	88 L	
Ref. A150413130	Set of feet		

For version without massage optional siphon ø52:

Chrome fninsh	**Ref. A506404600**	00
Rest of finishes	**Ref. A5064046..***	0B CN RG NB

Dimensions in mm.

Replace (..) in the product reference with the code of the chosen finish.

Pop-up waste (N)

Pop-up waste with siphon ø 52 mm:

Chrome fninsh	**Ref. A506404600**
Rest of finishes	**Ref. A5064046..***

Finishes:

00 0B CN RG NB

Dimensions in mm.

*Product on request

Replace (..) in the product reference with the code of the chosen finish.

Haiti bath

Steel

Baths

Resistance

High resistance to wear and tear, discoloration, chemical agents and UV light.

Easy cleaning

Easy-to-maintain smooth surface that can be easily cleaned with conventional cleaning products.

Thermal insulation

Low-conductivity material that provides outstanding insulation, resulting in greater energy efficiency.

Baths / Steel

Princess-N*

STEEL

2,4 mm

ANTI-SLIP

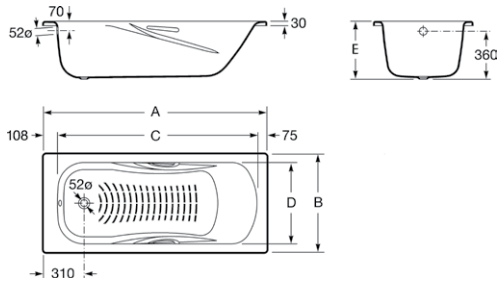

A	B	C	D	E	Litr.[1]
1700	750	1517	620	415	197
1600	750	1417	620	415	183
1500	750	1317	620	415	170
1700	700	1517	575	430	182

[1] Litres to the overflow

Steel bath

Dimensions		Massage	Finishes	Capacity	White
1700 x 700	**Ref. A220950001**	Without massage	Chrome handles	182 L	
1700 x 700	**Ref. A220990000**	Without massage	Without handles	182 L	
1700 x 750	**Ref. A220270001**	Without massage	Chrome handles	197 L	
1600 x 750	**Ref. A220370001**	Without massage	Chrome handles	183 L	
1500 x 750	**Ref. A220470001**	Without massage	Chrome handles	170 L	
	Ref. A291053100	Headrest optional			

For version without massage optional siphon ø52:

Chrome fninsh	**Ref. A506404600**	00
Rest of finishes	**Ref. A5064046..***	0B CN RG NB

Compatible panels and legs on page

Contesa

STEEL

2,4 mm

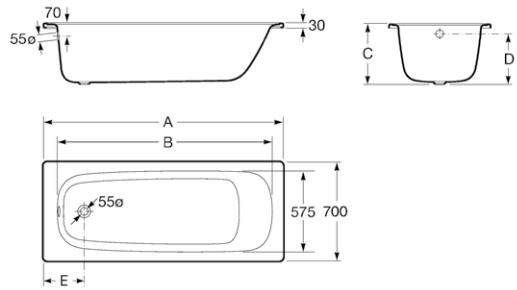

A	B	C	D	E	Litr.[1]
1700	1525	400	300	310	183
1600	1425	400	300	310	168
1500	1325	400	300	310	153

[1] Litres to the overflow

Steel bath

Dimensions			Capacity	White
1700 x 700	**Ref. A235860000**		183 L	
1600 x 700	**Ref. A235960000**		168 L	
1500 x 700	**Ref. A236060000**		153 L	

For version without massage optional siphon ø52:

Chrome fninsh	**Ref. A506404600**	00
Rest of finishes	**Ref. A5064046..***	0B CN RG NB

Compatible panels and legs on page

Dimensions in mm.

*Product on request

Replace (..) in the product reference with the code of the chosen finish.

Baths / Steel

Contesa-Bañaseo

STEEL

2,4 mm

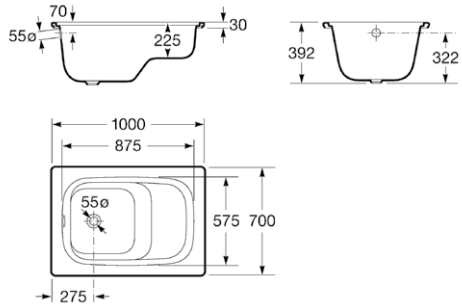

1000 x 700
Steel bath

		Capacity	White
Ref. A213100001		73 L	

Steel panels

Steel panels

		White
Ref. A259979000*	Front panel 1700	
Ref. A259980000*	Front panel 1600	
Ref. A259981000*	Front panel 1500	
Ref. A259988000*	Side panel 750	
Ref. A259989000*	Side panel 700	
Ref. A248427000	Universal set of bath steel legs	

Bath waste

Pop-up waste (N)

Pop-up waste with siphon ø 52 mm:

Chrome fninsh	**Ref. A506404600**
Rest of finishes	**Ref. A5064046..***

Finishes:

00 0B CN RG NB

Dimensions
in mm.

*Product on request